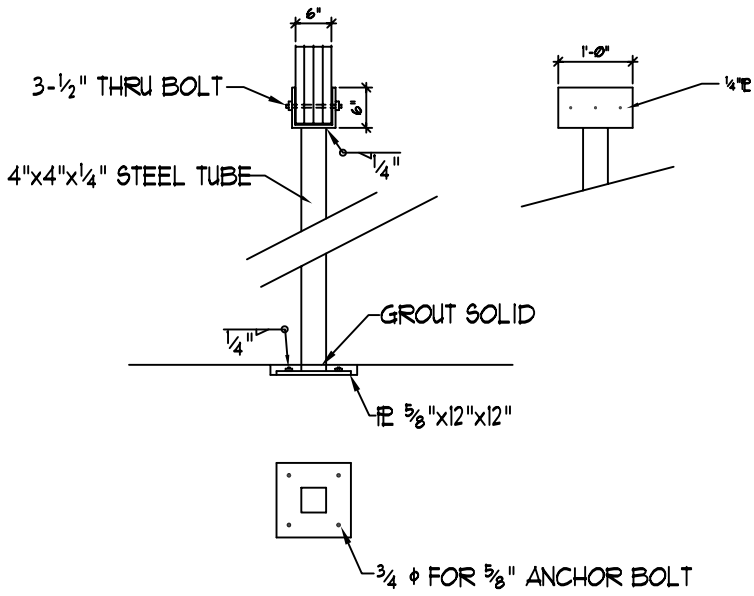

STEEL COLUMN DETAIL 60

SCALE: ¾"=1'-0" 6-3-21

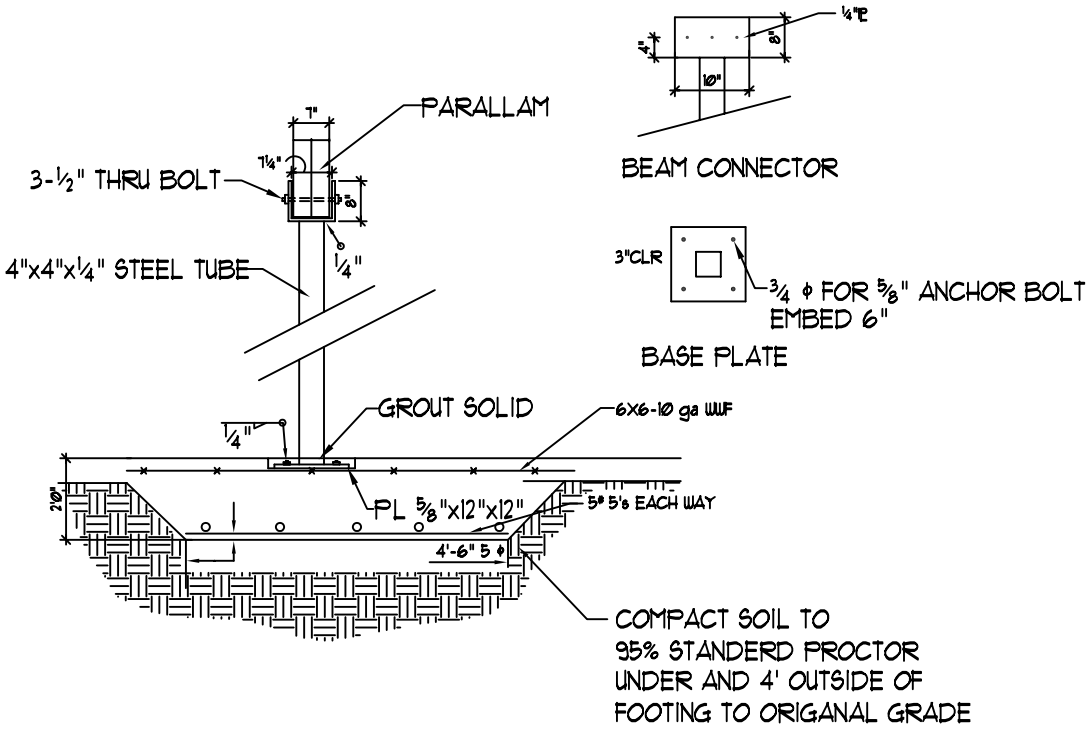

STEEL COLUMN DETAIL 60B

SCALE: ¾"=1'-0" B 6-3-21

MICHAEL GRAY'S

FULL SPECTRUM INC.

C.A.D. DRAFTING
& DESIGN SERVICE
1970 E. OSCEOLA PARKWAY #161
KISSIMMEE , FL 34743

OFFICE TELEPHONE # (321) 284-0167
CELL PHONE # (321) 624-8645

WWW. INFINITYHOMEPLANS.COM